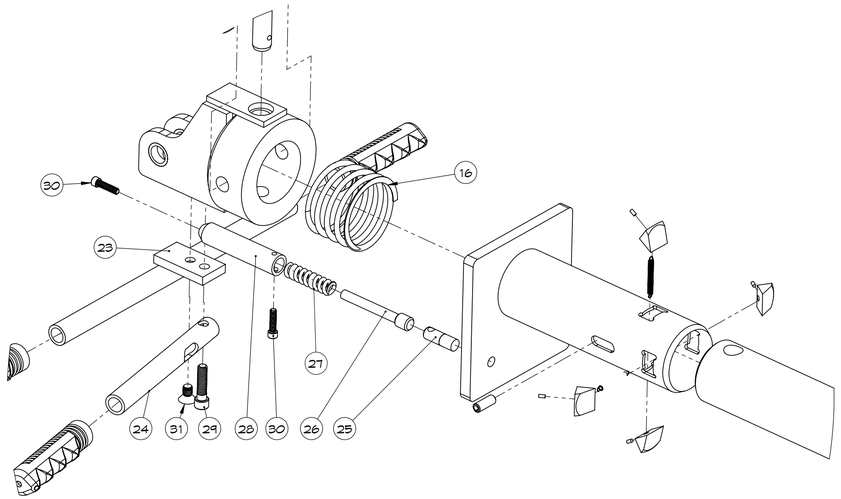

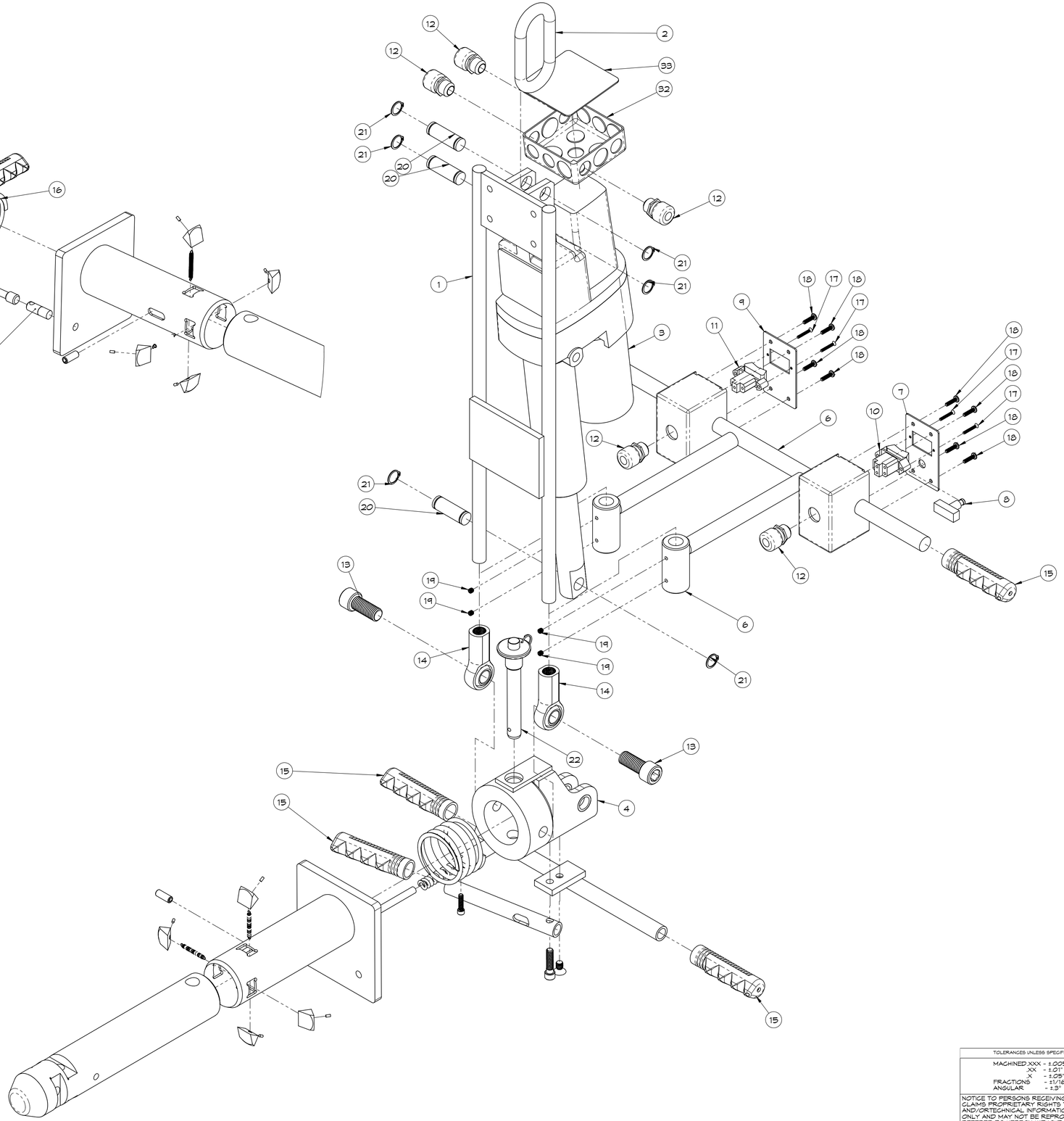

ITEM NO.	QTY.	PART NUMBER	DESCRIPTION
33	1	T115400	COVER, O BOX 4 X 4 RACO 752
32	1	T045220	BOX,4 X 4 SH RACO 192 190
31	1	T500401	SCREW,FLAT HEAD MACHINE 3/8-16 X 3/4
30	2	T500139	SCREW, SOCKET HD CAP, 1/4"-20 X 1" LG.
29	1	T500138	SCREW, SOCKET HD CAP, 3/8"-16 X 1-1/2" L
28	1	T325020	SPRING,RETAINER LT-8 B10220
27	1	T325290	SPRING,CONTROL OVER-RIDE #LT-18
26	1	T300093	ROD,CONTROL L1 B10218-1 LT1-7
25	1	T015100	ANVIL,LT-9
24	1	T175003	HANDLE,DISENGAGEMENT L1,L2 LT-5
23	1	T020015	HANDLE, TORQUE ARM L1 ELEC. M.T.R.
22	1	T250255	PIN,CARR LANE QRP CL-12-BLPB-4.00
21	6	T295168	RING,EXTERNAL RETAINING #7200-75
20	3	T250660	PIN,PIVOT LT-11(B10153-1)3/4"DIA.2.38"LG
19	4	T500291	SCREW, SET HEX SOCKET 1/4"-20 X 1/4" LG.
18	8	T500147	SCREW, MACH RH SL #10-24 X 3/4" LG.
17	4	T310004	SCREW,6-32 X 1 OHSL FASTENAL #27923
16	1	T325270	SPRING,COMPRESSION T ENGAG LT-17
15	5	T165080	GRIP,BLACK HANDLE LT-19, 7/8"
14	2	T300040	ROD END,FEMALE 3/4" #LT1-25, CF-12
13	2	T500219	SCREW,SCKT HD CAP SCREW 3/4-10 X 1-3/4"
12	5	T095015	CONNECTOR,APPLETON 1/2
11	1	T335190	SWITCH, ROCKER
10	1	T335180-001	SWITCH,MICRO ROCKER 2 SPEED
9	1	T23124-001	PLATE,FACE 1 ROCKER SWITCH REC. TUBING
8	1	T035	SWITCH,SINGLE POLE
7	1	T23124	PLATE,FACE 1 ROCKER SWITCH REC. TUBING
6	1	T155225-002	HANDLE MTD CONTROL NEW STY LS1/L1 ELECT
5	1	TA50000	3" TIP LIFT PROBE - 10.5"
4	1	T020013	ARM,TORQUE L1 ELECTRIC
3	1	T001060	LINEAR ACTUATOR, 6" (LS1)
2	1	T400051	LINK,OBLONG-FORGED 5/8"
1	1	T155070	LS1 ELECTRIC FRAME

TOLERANCES UNLESS SPECIFIED

MACHINED .XXX - ±.005"
.XX - ±.01"
.X - ±.05"
FRACTIONS - ±1/16"
ANGULAR - ±.3°

REV	DATE	BY	CHANGES

TILT-LOCK INC.
12070 43RD STREET NE
ST. MICHAEL, MN 55376
FAX: 763-497-7046
PH: 763-497-7045

TITLE
EXPLODED DRAWING OF TA32096

DRAWN BY:	DATE:	SCALE:	WEIGHT:
BCS	8/4/09	NONE	XXX

RELEASED BY:	DRAWING:	SIZE:	REV
GLM	TA32096P	D	

NOTICE TO PERSONS RECEIVING THIS DRAWING AND/OR TECHNICAL INFORMATION: TILT-LOCK CLAIMS PROPRIETARY RIGHTS TO THE MATERIAL DISCLOSED THEREON. THIS DRAWING AND/ORTECHNICAL INFORMATION IS ISSUED IN CONFIDENCE FOR ENGINEERING INFORMATION ONLY AND MAY NOT BE REPRODUCED OR USED TO MANUFACTURE ANYTHING SHOWN OR REFERED TO HEREON WITHOUT DIRECT WRITTEN PERMISSION FROM TILT-LOCK TO THE USER.